VISIONXS-IP-CPU-F(M)-DP-UHR-A-UG

KVM extenders, Article number A1110480



Front



Back

The matrix-compatible KVM-over-IP extenders of the VisionXS-IP-DP-UHR series extend keyboard, video, and mouse signals, as well as other peripheral data (e.g., audio and USB), via a standardized IP network infrastructure with CAT or fiber connection (up to 10,000 m). An extender system consists of a computer module (CPU) and a compatible console module (CON). Computers can be controlled in near real-time – both in extender and matrix applications. The VisionXS-IP-DP-UHR series supports DisplayPort1.2 for ultra-high-resolution video up to 4096 × 2160 (60 Hz) or 5120 × 2160 (50 Hz). Video data is processed pixel-perfectly and offers excellent hand-eye coordination, thanks to bluedec™ – G&D's advanced, multi-stage, lossless compression technology.

SCOPE OF DELIVERY

Quantity	Description	Article number
1	DP1.4-Cable-M/M-2 SK13357 2m	A6300173
1	USB-AM/BM-2 cable USB 2m	A6300113
1	Audio-M/M-2-ferrite cable 2m	A6300083
1	Safety instructions flyer - FCC class B	A9100371
1	Power supply usage flyer	A9100409

DETAILS

VIDEO

- bluedec™ – advanced developed multi-stage compression for best video quality and practically latency-free transmission. This method enables pixel-perfect video transmission with efficient bandwidth use.
- The KVM-over-IP end devices can be flexibly combined with each other, even if they process different video signals (Mix & Match)
- EDID data utilization from the workplace monitor
- Flexible EDID profile options for optimized monitor settings
- Resolution up to
  5120 × 2160 @ 50 Hz,
  5120 × 1440 @ 60 Hz,
  4096 × 2160 @ 60 Hz,
  2560 × 1440 @ 144 Hz,
  1920 × 1080 @ 240 Hz

SIGNALS

- Embedded stereo audio (DisplayPort Digital, 2 channel LPCM, AC3, DTS, sampling rate up to 192 kHz)
- Transparent audio signals (stereo, analog)
- GenericUSB support for USB classes HID (Human Interface Device), SmartCard and mass storage
- The product allows the simultaneous use of up to five GenericUSB devices via a console module. For this, both the used console module and the used computer module must support the use of up to five GenericUSB devices.

TRANSMISSION

- At least one Layer-2-managed switch with Gigabit Ethernet is required, offering features such as QoS and VLAN. Additionally, adequate performance (forwarding bandwidth, switching bandwidth, forwarding performance, and uplinks) must be ensured, especially when using multiple network switches
- KVM-over-IP™ over IP-based networks (layer 3)
- The transmission distance between two active network components is up to 400 meters over fiber multimode optics, incl. transmission module(s)/SFP transceiver(s)

DEVICE

- Improved security through physical separation between workplaces and computers
- Access to standard interfaces of the computer, with no software installation required
- Compact design for space-saving installation within a VisionXS DeviceCarrier (1 or 3 RU)

- PowerPack not included in the scope of delivery
- DT variant: Optional redundant power supply via an internal power unit for high reliability
- Fanless variant: fanless model
- The devices are compatible with the ControlCenter-IP and ControlCenter-IP-XS series (matrix operation) and other KVM-over-IP end devices for computer and workplace connections (extender operation)

WARRANTY

- A 3-year, free of charge product guarantee
- For an additional fee guarantee extension possible

FEATURES

SECURITY FEATURES

- Permanent encryption of all communication and data transmissions, as well as sensitive information such as login credentials and passwords, guarantees a high level of security in critical environments
  - AES256-GCM for keyboard/mouse and control data
  - AES128-CTR for video, audio, GenericUSB and RS232
- Bootloader, operating system, and firmware form a "Trusted Computing Platform" with automatic integrity checks during system startup
- Integrated Trusted Platform Module (TPM) protects all access and configuration data from being spied on or tampered with by third parties
- Console modules do not store security-relevant information such as login credentials, which could be extracted in the event of device loss
- Monitoring of system states such as status, power supply, temperature and computer modules and console modules are monitored as well
- Each monitoring value can be enabled individually; critical states raise an alarm, which authorized users can acknowledge to downgrade it to warning level
- Syslog logging locally and to up to two servers, via TCP or UDP, with configurable port, eight severity levels per the syslog standard and ISO 8601 timestamps
- Logged events include user logins, failed login attempts, changes to user rights, connections to remote targets and failed backups
- SNMP agent supporting SNMPv2c and SNMPv3; for SNMPv3, authentication via SHA-1 through SHA-512, encryption with AES128, AES192 or AES256, and security levels up to authPriv
- Access to the SNMP agent can be restricted to defined source IP addresses or network segments (IPv4 and IPv6)
- SNMP notifications to multiple receivers, sent either as traps or as acknowledged informs, with a configurable severity threshold
- Comprehensive rights management and user administration, allowing precise control over which user can access which resources
- Option for activatable access protection (default operating mode in matrix systems), in which authentication is required before accessing computer sources
- Support for external directory services (Active Directory, Radius, LDAP) to meet company security policies
- To comply with individual password policies and improve security, password complexity can be configured system-wide
- Configurable login options, such as displaying terms of use or setting the maximum acceptable number of failed login attempts, can enhance system security
- The optional UID-Locking restricts the usable end devices, ensuring that no additional devices can be added or replaced after activation

- Auto Backup Function: Automates backups at user-defined intervals and replaces manual intervention – ensuring reliable, timely data protection without the need for continuous monitoring
- Freeze function: If the video signal is lost, the last displayed image is frozen and highlighted with a colored frame and timer
- 2-Factor-Authentication (2FA) – is integrated by default in KVM extenders and enhances security by requiring a second, possession-based factor during user authentication:
  - The traditional password authentication is combined with a time-limited, single-use code (Time-Based-One-Time-Password - TOTP)
  - You can choose between using the internal authentication server provided in the device or an external directory service
  - Authenticator apps or hardware token can be used
  - This additional layer of protection prevents unauthorized access and ensures the highest level of security, particularly in sensitive IT environments

OPERATION FEATURES

- Ready for operation out of the box, no additional configuration required in direct connection. IP address configuration and pairing are required when using multiple modules in a network setup
- Permanent keyboard/mouse emulation ensures a stable system
- Compatibility with special USB-HID input devices
- Operation via multilingual on-screen display (OSD) and hotkeys
- Configuration and update via the multilingual HTML5 web interface “Config Panel 21” (Java-free)
- Support of DDC/CI (Display Data Channel / Command Interface) to enable centralized software-side control of monitor settings such as brightness
- additional, independent management network interface for configuration
- manual bandwidth management to adjust the required bandwidth
- With the integrated IP-MUX functionality the console modules offer the possibility to access different computer modules (one after the other). To use this function, you can connect a maximum of 20 computers to separate computer modules. The computer modules are configurated as targets in the console module and can be connected via the local on-screen display.

EXTENSIONS

DEVICE

- External power supply via external 12V power pack or G&D-MultiPower, providing a central and redundant power supply
- Device mounting via G&D 19” DeviceCarrier for VisionXS (1 or 3 RU)

SECURITY FEATURES

- SecureCert feature – premium software feature that ensures compliance with the strict security standards FIPS 140-3, DoDIN APL, and CC EAL2+
  - Federal Information Processing Standard (FIPS) 140-3 is a U.S. government standard designed to protect sensitive and valuable data in IT systems. It defines security requirements for cryptographic modules and provides a secure framework for cryptographic operations in IT infrastructures
  - The Department of Defense Information Network Approved Products List (DoDIN APL) is a consolidated list of products approved for use in the technology infrastructure of U.S. government agencies. To be listed, products must meet specific requirements within defined categories, including technical, functional, and security-related criteria
  - Common Criteria (CC) is an internationally recognized standard for evaluating and certifying the security of IT products. It ensures that products meet defined security requirements and are protected against identified threats. Certification is granted at Evaluation Assurance Level (EAL) 2+, an internationally acknowledged level that guarantees a fundamental and reliable security assessment

SYSTEM EXTENSION

- Transm. Redundancy Option (Link-Aggregation): The devices are prepared for transmission redundancy without additional hardware and can be activated via a software feature key.
  - Two network interfaces can be linked via link aggregation, ensuring seamless failover and stable communication in case of a failure
- You can integrate the matrix-compatible KVM-over-IP extenders into a complete installation with a ControlCenter-IP or ControlCenter-IP-XS, even at a later point in time. This provides you with even greater flexibility through the possibility of distributed access – and the existing components can continue to be used.

INTERFACES

FRONT

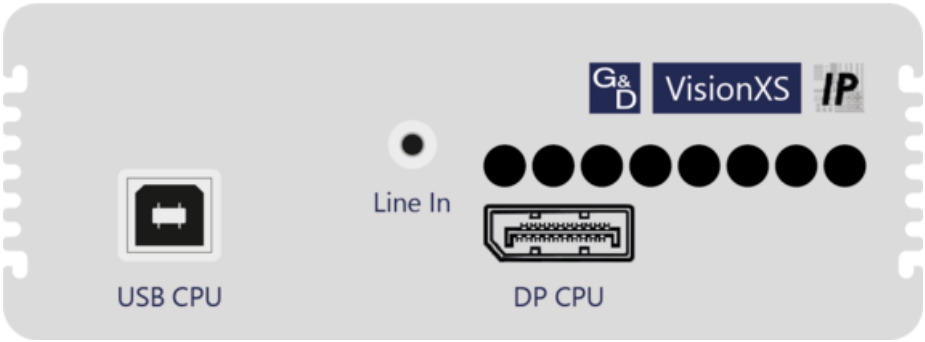

Aperture designation	Design	Description
USB CPU	USB-B socket 2.0	Connection to computer - USB
Line In	Jack socket - 3,5 mm	Connection to computer - Audio
DP CPU	DisplayPort socket	Connection to computer - Video

BACK

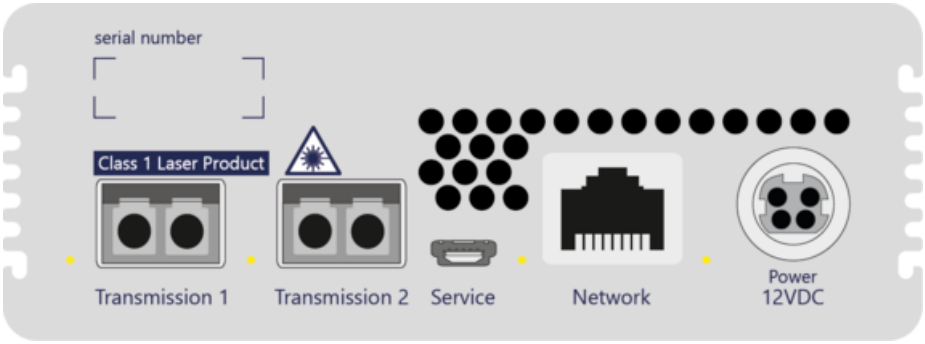

Aperture designation	Design	Description
Transmission 1	LC-Duplex socket	Data transmission to console module or matrix switch over IP network (FIBER)
Transmission 2	LC-Duplex socket	Data transmission to console module or matrix switch over IP network redundant (FIBER)
Service	Micro-USB socket	Port for service purposes
Network	RJ45 socket	Port for IP network
Power	Mini-DIN 4 socket	Power supply DC

TECHNICAL DATA

General	Brand	G&D
	Product group	KVM extenders
	Product Family	VisionXS-IP
	Country of origin	Germany
	KVM matrix system component	Computer module (digital)
	Power Supply	no redundancy
Transmission	Number of transmission channels	1
	Redundant transmission channels	optional redundant KVM transmission
	Range	26 m (62.5/125µm) 33 m (62.5/125µm, OM1 - 200MHz*km) 66 m (50.0/125µm) 82 m (50.0/125µm, OM3 - 2000MHz*km) 300 m (50.0/125µm, OM3 - 2000MHz*km) 400 m (50.0/125µm, OM4 - 4700MHz*km)
	Laser class	Class 1
	Type of interface	LC-Duplex
	Wavelength	850 nm
	Medium	Fiber MM
	Data rate	10 Gbit/s
Video input	Quantity	1

	Format	DisplayPort 1.2 (LBR, HBR, HBR2, SingleStream-Transport (SST))
	Colour depth	24 bit
	Pixel encoding	RGB 4:4:4 (24 bpp / 8 bpc)
	Pixel rate ca.	25 MPixel/s to 600 MPixel/s
	Vertical frequency	24 Hz to 240 Hz
	Horizontal frequency	25 kHz to 295 kHz
	Exemplary resolutions	4096 × 2160 (60 Hz) 3840 × 2160 (60 Hz) 2560 × 1600 (60 Hz) 2560 × 1440 (144 Hz) 2048 × 2048 (60 Hz) 1920 × 1200 (60 Hz) 1920 × 1080 (240 Hz) 1920 × 1080 (60 Hz) 5120 × 1440 (60 Hz) 5120 × 2160 (50 Hz)
	General Notes	Further VESA and CTA standardised resolutions possible within pixel rate and horizontal/vertical frequency.
	Supported industry standards	Display Data Channel Command Interface (DDC/CI) Extended Display Identification Data (EDID)
Audio 1	Transmission type	2-channel LPCM Stereo DTS AC3
	Resolutions	24 bit 20 bit 16 bit
	Sampling rate	up to 192 kHz

	Audio support	Digital Embedded
Audio 2	Transmission type	Stereo Transparent
	Resolutions	24 bit digital
	Sampling rate	up to 96 kHz
	Bandwidth	22 kHz
	Audio support	Analog
USB	Separate USB transmission port	no
	Specification	USB 2.0
	GenericUSB support	up to 5 devices
	Medium	Embedded
	Transmission rate	max. 25 Mbit/s (Full Speed)
	USB classes	Mass Storage (MSC / UMS) Human Interface Device (HID) SmartCard
Network	Quantity	1
	Medium	CAT5 CAT6 CAT7
	Data rate	10 Mbit/s 100 Mbit/s
Maintenance	Update via	ConfigPanel (Network)
	Serviceport settings	460800bps (8/N/1)
Housing	Material	Anodised aluminium

	Active cooling (fan)	yes
	Width ca.	109 mm
	Height ca.	40 mm
	Depth ca.	184 mm
	IP protection class	IP20
Operating conditions	Operating environment temperature	5 °C to 45 °C
	Operating air humidity, non-condensing	20 % to 80 %
	Area of application	Indoor use
	Maximum operating altitude above sea level	3,048 m
	Storage environment temperature	-20 °C to 60 °C
	Storage air humidity, non-condensing	15 % to 85 %
	MTBF	200,000 h at 25°C
	Conformities	CE compliant (see downloads) UKCA compliant (see downloads) FCC compliant (see manual) TAA compliant (see downloads) RoHS compliant (see downloads) WEEE (reg. no. DE30763240) REACH compliant (see downloads)
Power supply	Quantity	1
	Type	External
	Input voltage	12 VDC

Current consumption	1.5 A
Power consumption idle	14.3 W
Power consumption max.	16.7 W
Heat output idle	14.3 W / 48.79 BTU/h
Heat output max.	16.7 W / 56.98 BTU/h

MORE VARIANTS

Description	Article number
VisionXS-IP-CPU-F(M)-DP-UHR KVM-over-IP computer module to extend DisplayPort1.2 signals, transmission via fiber multimode and over IP-based networks	A1110264
VisionXS-IP-CPU-F(M)-DP-UHR-A KVM-over-IP computer module to extend DisplayPort1.2 signals, transmission via fiber multimode and over IP-based networks	A1110265
VisionXS-IP-CPU-F(M)-DP-UHR-AR-DT KVM-over-IP computer module to extend DisplayPort1.2 signals, transmission via fiber multimode and over IP-based networks	A1110266
VisionXS-IP-CPU-F(M)-DP-UHR-AR-UG-DT KVM-over-IP computer module to extend DisplayPort1.2 signals, transmission via fiber multimode and over IP-based networks	A1110482
VisionXS-IP-CPU-F(M)-DP-UHR-DT KVM-over-IP computer module to extend DisplayPort1.2 signals, transmission via fiber multimode and over IP-based networks	A1110267
VisionXS-IP-CPU-F(M)-DP-UHR-UG KVM-over-IP computer module to extend DisplayPort1.2 signals, transmission via fiber multimode and over IP-based networks	A1110481
VisionXS-IP-CPU-F(M)-DP-UHR-UG-DT KVM-over-IP computer module to extend DisplayPort1.2 signals, transmission via fiber multimode and over IP-based networks	A1110483

CONTACT

WE ARE HERE FOR YOU!

If you have any further questions, we are looking forward to advising you on your individual project requirements.

TECHNICAL SALES

Tel.: +49 271 23872-333
Fax: +49 271 23872-120
E-Mail: sales@panoptec.com

HEADQUARTERS

Panoptec Europe GmbH
Obere Leimbach 9 | 57074 Siegen | NRW | Deutschland

Tel.: +49 271 23872-0
Fax: +49 271 23872-120
E-Mail: sales@panoptec.com

US OFFICE

G&D North America Inc.
4540 Kendrick Plaza Drive | Suite 100
Houston, TX 77032 | United States

Tel.: +1-346-620-4362
E-Mail: sales.us@gdsys.com

MIDDLE EAST OFFICE

Panoptec Europe GmbH
Dubai Studio City | DSC Tower
12th Floor, Office 1208 | Dubai, UAE

Tel.: +971 4 5586178
E-Mail: sales@panoptec.com

APAC OFFICE

Panoptec Europe GmbH
60 Anson Road #17-01
Singapore 079914

Tel.: +65 9685 8807
E-Mail: sales@panoptec.com